# 6BY3

Page


Engine Specifications ..... 2
Engine Room Space for Safety, Service and Correct Operation... 3
Marine Gear/Stern-Drive Specifications ..... 4
6BY3 (Inboard) ..... 5
6BY3 (Stern-Drive) ..... 6
Flywheel Housing Dimensions (For Inboard) ..... 7
Flywheel Housing Dimensions (For Stern-Drive) ..... 8
Fuel System Specifications ..... 9
Piping Diagram ..... 10
Cooling System Specifications ..... 11
Air Intake and Exhaust Specifications ..... 13
Mixing Elbow ..... 14
Alarm System Specifications ..... 15
Remote Control System ..... 15
Electrical System ..... 16
Performance Curves ..... 20
Engine Mount ..... 22
Installation Specifications ..... 23
Cold Starting Aids ..... 24
Water Heater Tank Connection ..... 24
Heat Insulation Requirements ..... 24
Optional Accessories ..... 24

# *6BY3*

Please refer to the Safety section at the beginning of this manual.

## Engine Specifications

| Parameter | Data | |
|---|---|---|
| | 6BY3-220 | 6BY3-260 |
| Configuration | 4-cycle diesel, 15° inclined, dual overhead camshaft | |
| Crankshaft rotation (viewed from flywheel) | Counterclockwise | |
| Combustion system | Direct injection | |
| Aspiration | Turbocharger with charge air cooler | |
| Number of cylinders | In-line 6 | |
| Bore × stroke | 84 mm × 90 mm (3.307 in. × 3.543 in.) | |
| Displacement | 2.993 ℓ (182.6 cu in.) | |
| Continuous rating output at crankshaft (at 3876 $min^{-1}$ (rpm)) | 148 kW (201 hp) | 174 kW (237 hp) |
| Maximum output at crankshaft (at 4000 $min^{-1}$ (rpm)) | 162 kW (220 hp) | 191 kW (260 hp) |
| Maximum torque | 500 N·m (369 ft-lb) | 550 N·m (407 ft-lb) |
| High idling speed | 4600 $min^{-1}$ (rpm) | |
| Low idling speed (at 88 °C (190 °F)) | 670 $min^{-1}$ (rpm)*1 | |
| Firing order | 1 - 5 - 3 - 6 - 2 - 4 - 1*2 | |
| Engine lubrication system | Enclosed, forced | |
| Engine oil capacity (0° incline) | 11.0 ℓ (11.62 qt)*3 | |
| Dry weight without gear/drive or mixing elbow | For stern-drive: 338 kg<br>For marine gear: 319 kg | |
| Total air flow requirements | 2750 $m^3$/h (97115 $ft^3$/h) | |

**1: 1080 $min^{-1}$ (rpm) at startup for alternator excitation.*
**2: No. 1 cylinder is at the coolant pump end of the engine.*
**3: The engine oil capacity includes oil in the oil pan, channels, coolers, and filter.*

*Note • Rating condition, ISO 8665*
*Fuel temperature: 40 °C (104 °F)*

*• 1 hp metric = 0.7355 kW*

# Engine Room Space for Safety, Service and Correct Operation

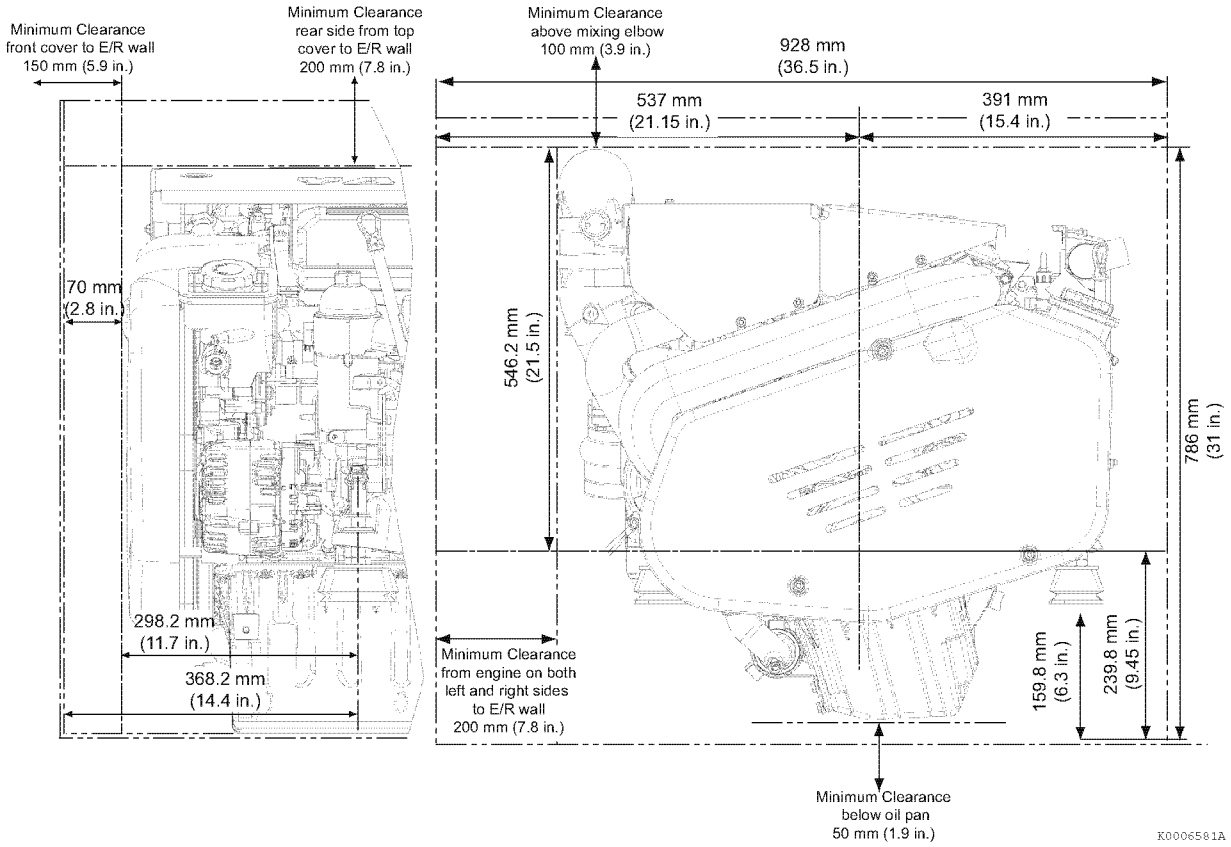


***Figure 1***

The installer is responsible for ensuring that there is sufficient engine room space to access the engine for service and repair.

Superstructures and connected components should be installed so that the engine can be removed, fitted and serviced without time being lost to any obstructions.

The following components must be easy to access:

- Fuel filter(s)
- Fuel system components for bleeding the fuel system
- Air filter
- Engine oil filter(s)
- Oil fill port and dipstick
- Engine oil drain plug
- Marine gear or sail-drive oil fill port/dipstick
- Coolant tank fill port
- Coolant drain cock(s)
- Coolant pump
- Heat exchanger
- Complete seawater pump assembly (to access impeller and filter)
- Zinc anodes
- Batteries
- Starter motor
- Alternator
- Turbocharger

## Marine Gear/Stern-Drive Specifications

Use the KMH51A or KMH50V marine gear or ZT370 or Mercruiser Bravo 1, 2 or 3 stern-drive with the 6BY3 series engine.

| | 6BY3-220 | 6BY3-260 |
|---|---|---|
| Stern drive | ZT370 or Mercruiser Bravo-1, -2, -3 | |
| Marine gear | KMH51A, KMH50V | |

**⚠ WARNING**

**Fire Hazard**

- **ZT370 and Bravo stern-drive power steering hoses must be routed away from hot engine components.**
- **Ensure the heat insulator is installed on the turbocharger.**

---

*Note: See the marine gear/stern-drive manufacturers literature for additional information.*

# 6BY3 (Inboard)

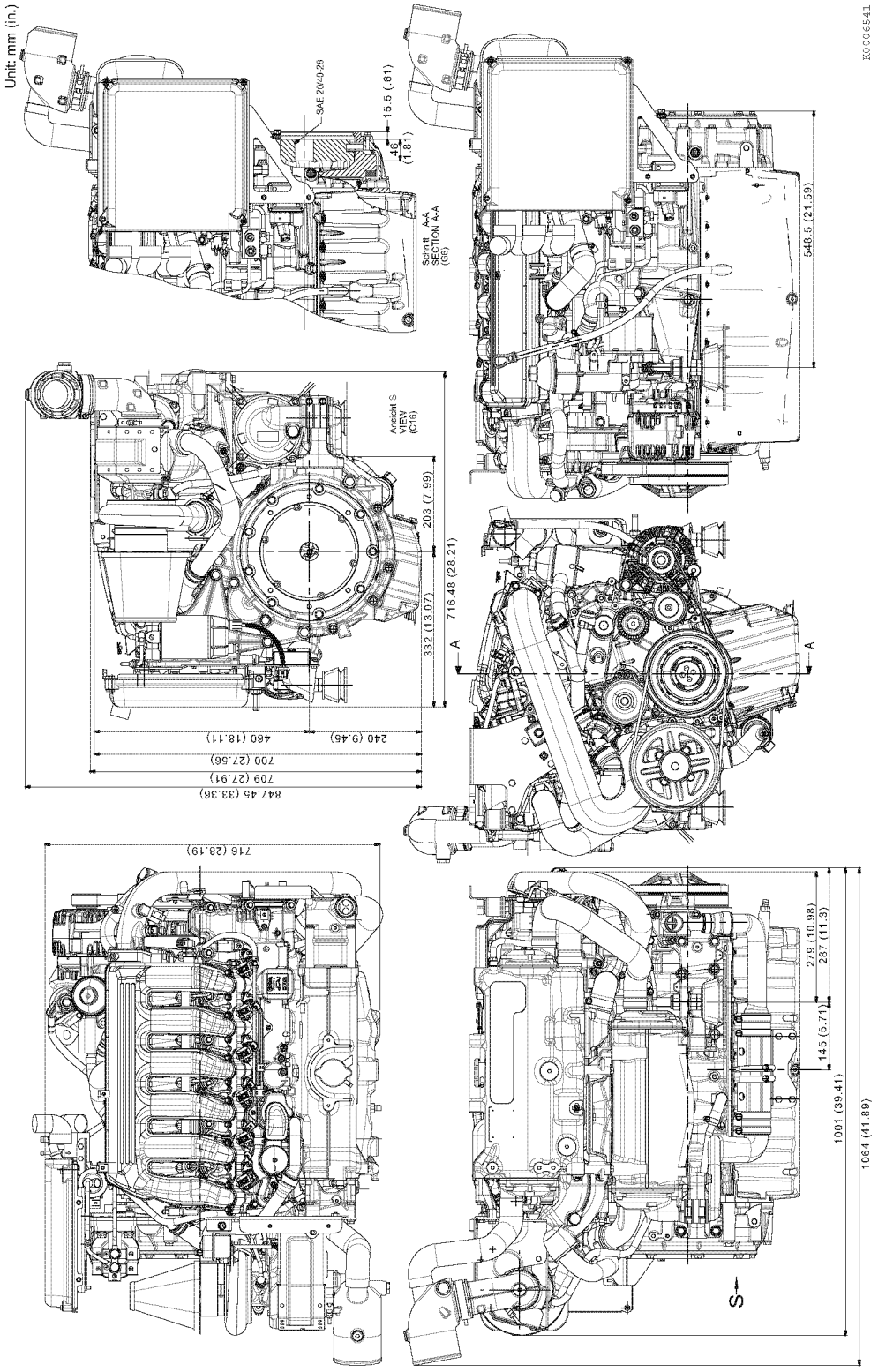


*Figure 2*

# 6BY3 (Stern-Drive)

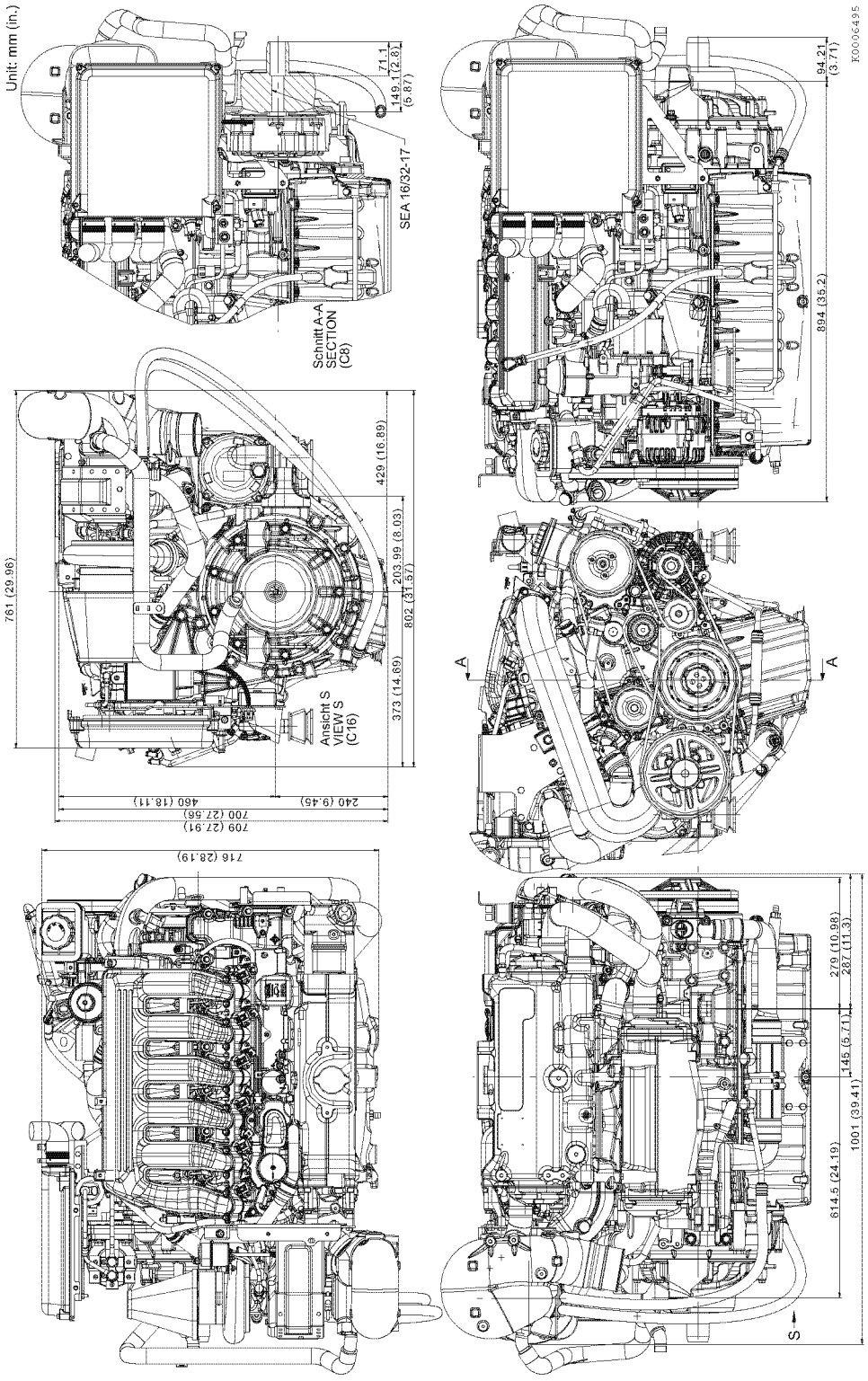


***Figure 3***

# Flywheel Housing Dimensions (For Inboard)

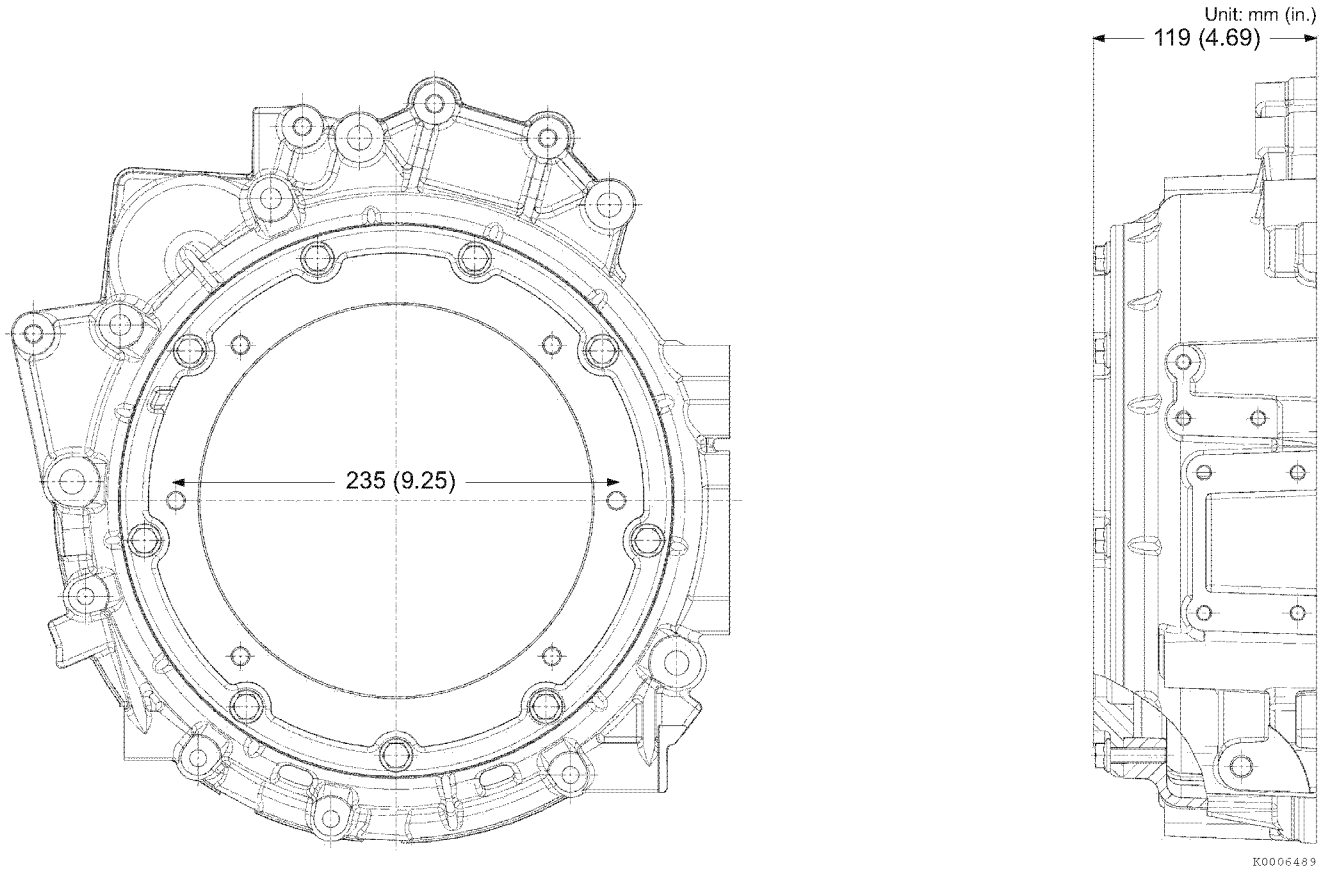


*Figure 4*

# Flywheel Housing Dimensions (For Stern-Drive)

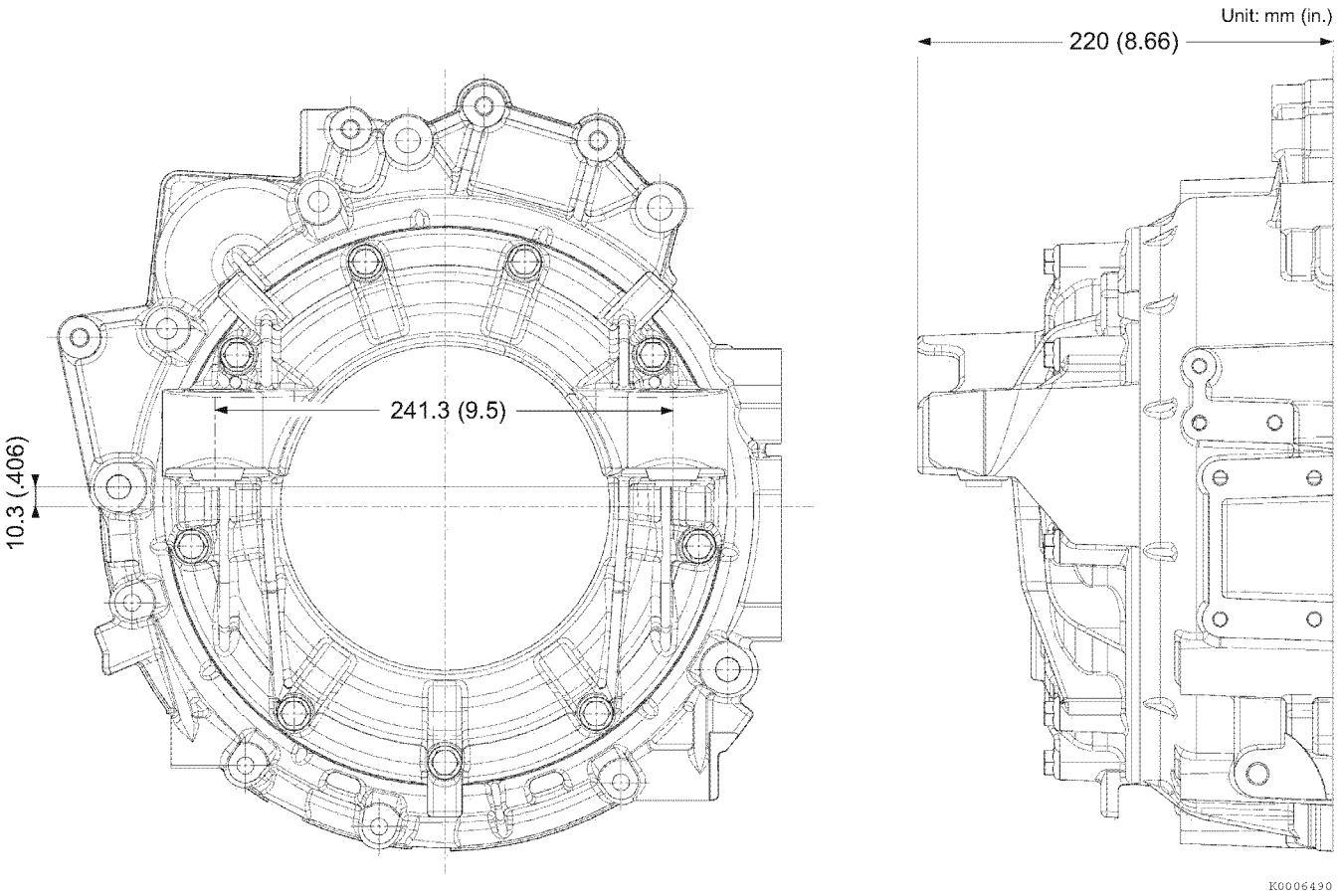


*Figure 5*

## Fuel System Specifications

| Parameter | Data | |
|---|---|---|
| | 6BY3-220 | 6BY3-260 |
| Maximum fuel feed pump suction head | 1.0 m (39.37 in.) | |
| Maximum fuel feed pump discharge volume | 200.0 ℓ/hr minimum (52.8 gal/hr minimum) | |
| Maximum fuel feed pump discharge pressure | 5 bar (72.5 psi) | |
| Fuel inlet pipe connector thread | 3/8 NPT | |
| Maximum fuel inlet temperature | 70 °C (158 °F) | |
| Fuel consumption at rated output | 47 ℓ/hr (12.4 gal/hr) | 54 ℓ/hr (14.3 gal/hr) |
| Fuel line (minimum size) | Hose acc. ISO 7840 A1 (fire resistance hose) is requested. Max length of hose between prefilter and engine depends on suction height of complete suction line. | |
| Inner diameter for inlet | 8 mm (0.32 in.) | |
| Inner diameter for outlet | 12 mm (0.47 in.) | |

*Note: YANMAR supplies a water separating pre-filter for mounting by the installer. The engine is also equipped with an on-engine fine filter.*

**⚠ WARNING**

**Fire Hazard**

**Always route fuel lines away from hot engine components, such as the exhaust manifold, turbocharger and exhaust hoses. Fuel lines must be secured to the hull with approved clamps every 100 cm (4.3 in.).**

# Piping Diagram

## ■ Fuel flow

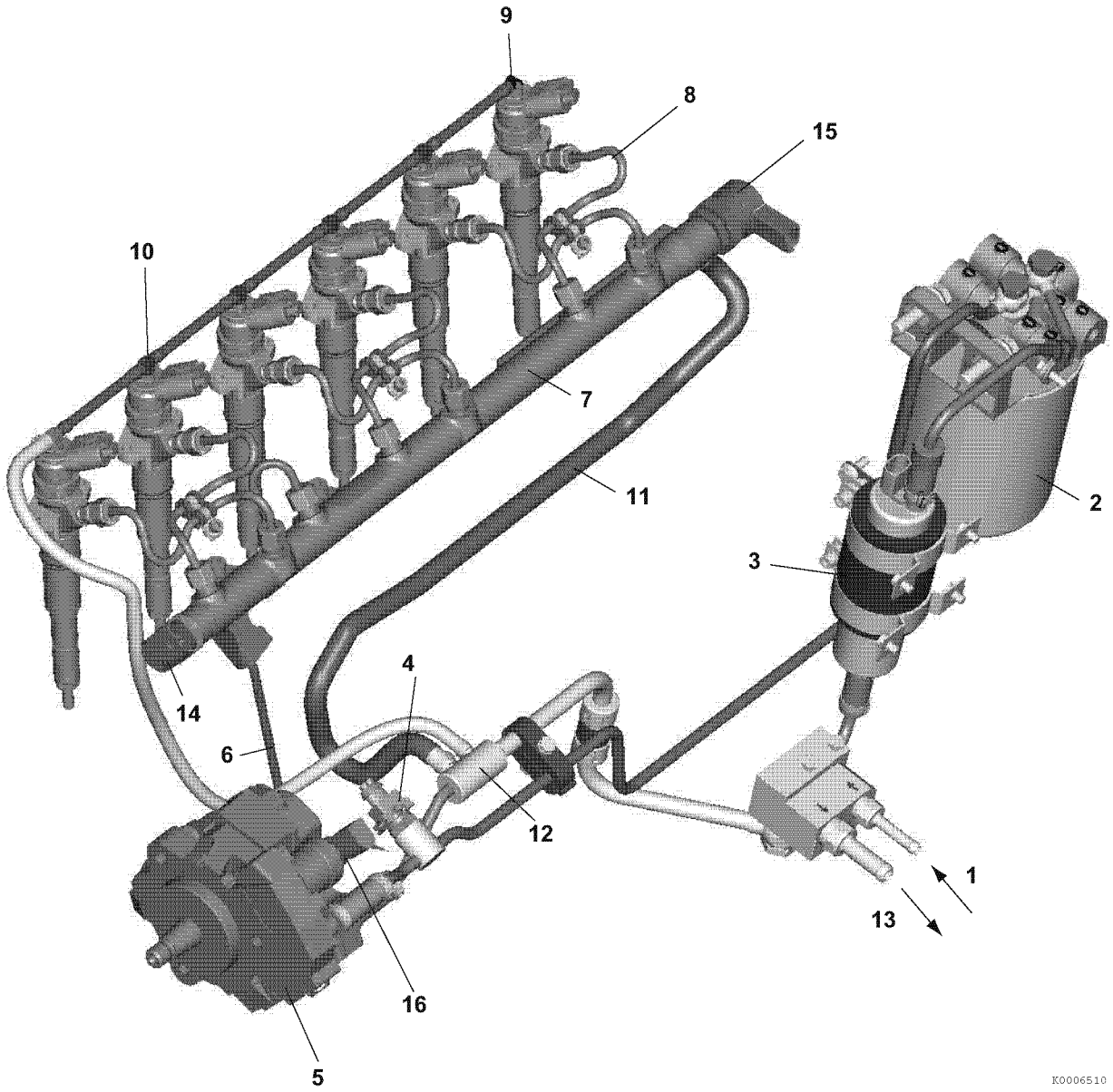


1 – Fuel inlet from tank
2 – Fuel filter (10 micron)
3 – Fuel feed pump
4 – Inlet fuel temperature sensor
5 – High-pressure fuel pump
6 – High-pressure fuel supply line
7 – High-pressure fuel common rail
8 – Fuel injection line
9 – Fuel injector
10 – Fuel injector return hose
11 – Common rail return line
12 – Return fuel tee with back pressure valve
13 – Return fuel to fuel tank with over pressure valve
14 – Fuel pressure sensor
15 – Fuel pressure regulator (ECU-controlled)
16 – Fuel measuring unit (ECU-controlled)

***Figure 6***

## Cooling System Specifications

| Parameter | Data | |
|---|---|---|
| | 6BY3-220 | 6BY3-260 |
| Cooling system | Closed cooling with heat exchanger | |
| Coolant capacity (approximately) | 13.0 ℓ (13.7 qt) | |
| Coolant capacity (reservoir) | 1.0 ℓ (1.0 qt) | |
| Maximum seawater pump flow rate at maximum rating | 165 ℓ/min. (174 qt/min.) | |
| Maximum seawater pump suction head | 0.5 m (19.69 in.) | |
| Seawater inlet pipe connector outer diameter | 38.1 mm (1.5 in.) | |
| Thermostat operating temperature (full open) | 96 °C (205 °F) | |
| Thermostat operating temperature (opening) | 88 °C (190.4 °F) | |
| Maximum overflow pipe length (coolant reservoir to filler cap) | 1.0 m (39.37 in.) | |
| Overflow pipe inner diameter (coolant reservoir to filler cap) | 6 mm (0.250 in.) | |
| Water heater tank/cabin heater pipe inside diameter | 10 mm (0.394 in.)*1 | |

**1: Must have a minimum pressure rating of 1.5 bar (22 psi).*

**NOTICE**

The coolant hose from the heat exchanger to the sub-tank must be routed away from hot engine components. Never route coolant hoses over the flywheel side of the engine.

## ■ Cooling flow

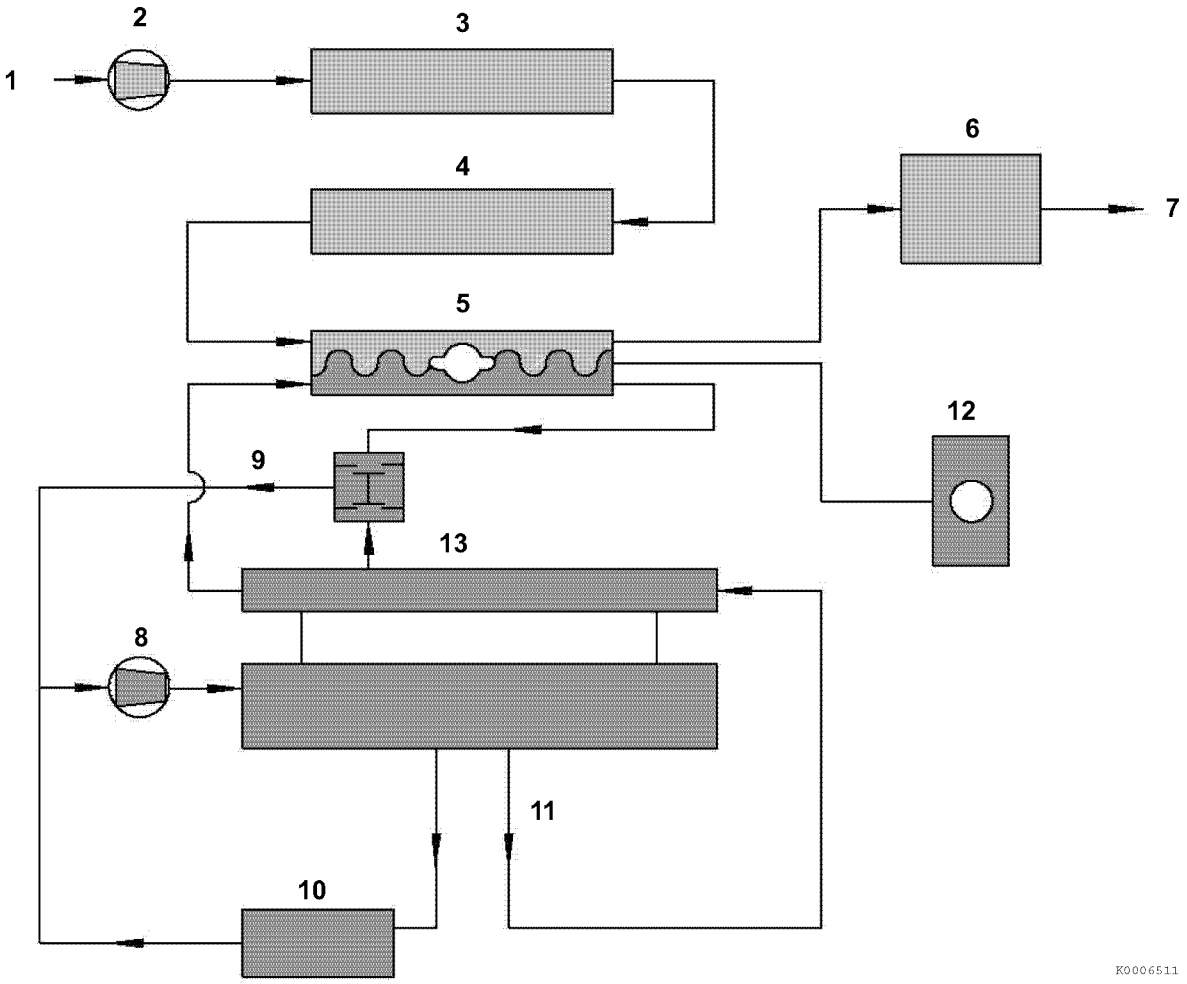


1 – Seawater supply
2 – Seawater pump
3 – Hydraulic oil cooler
4 – Charge oil cooler
5 – Engine heat exchanger
6 – Exhaust/seawater mixing elbow
7 – Exhaust/seawater exit
8 – Engine coolant pump
9 – Thermostat
10 – Engine oil cooler
11 – Engine coolant passages
12 – Coolant recovery tank
13 – Water cooled exhaust manifold

***Figure 7***

*Note: Typical 4BY3 engine shown. 6BY3 is similar.*

## Air Intake and Exhaust Specifications

Check for leaks at initial start.

| Parameter | Data | |
|---|---|---|
| | 6BY3-220 | 6BY3-260 |
| Exhaust pipe outer diameter connection | 102 mm (4.0 in.) | |
| Air volume necessary for combustion at WOT | 950 $m^3$/h (33549 $ft^3$/h) | |
| Maximum air inlet depression | 4.0 kPa, 408 mmAq (16.06 in.Aq) | |
| Maximum back pressure | 45 kPa, 4589 mmAq (180.67 in.Aq) | |
| Maximum output exhaust temperature before turbocharger | 630 °C (1166 °F) | 680 °C (1256 °F) |
| EPA exhaust test port sizes | Location: Mixing Elbow<br>G 1/4 - 19 BSPP*1 or G 3/8 - 19 BSPP*1 | |
| Maximum turbocharger boost pressure (min/max) | 2050/2250 mbar<br>(29.7/32.6 psi) | 2100/2300 mbar<br>(30.5/33.4 psi) |
| Maximum engine room ambient temperature | 60 °C (140 °F) | |

**1: Back pressure measured from EPA test port located on the mixing elbow.*

**NOTICE**

Test ports are British Standard Pipe Parallel (BSPP) not National Pipe Thread (NPT).

BSPP and NPT threads are not compatible due to the thread pitch. Mixing can cause thread damage.

## Mixing Elbow

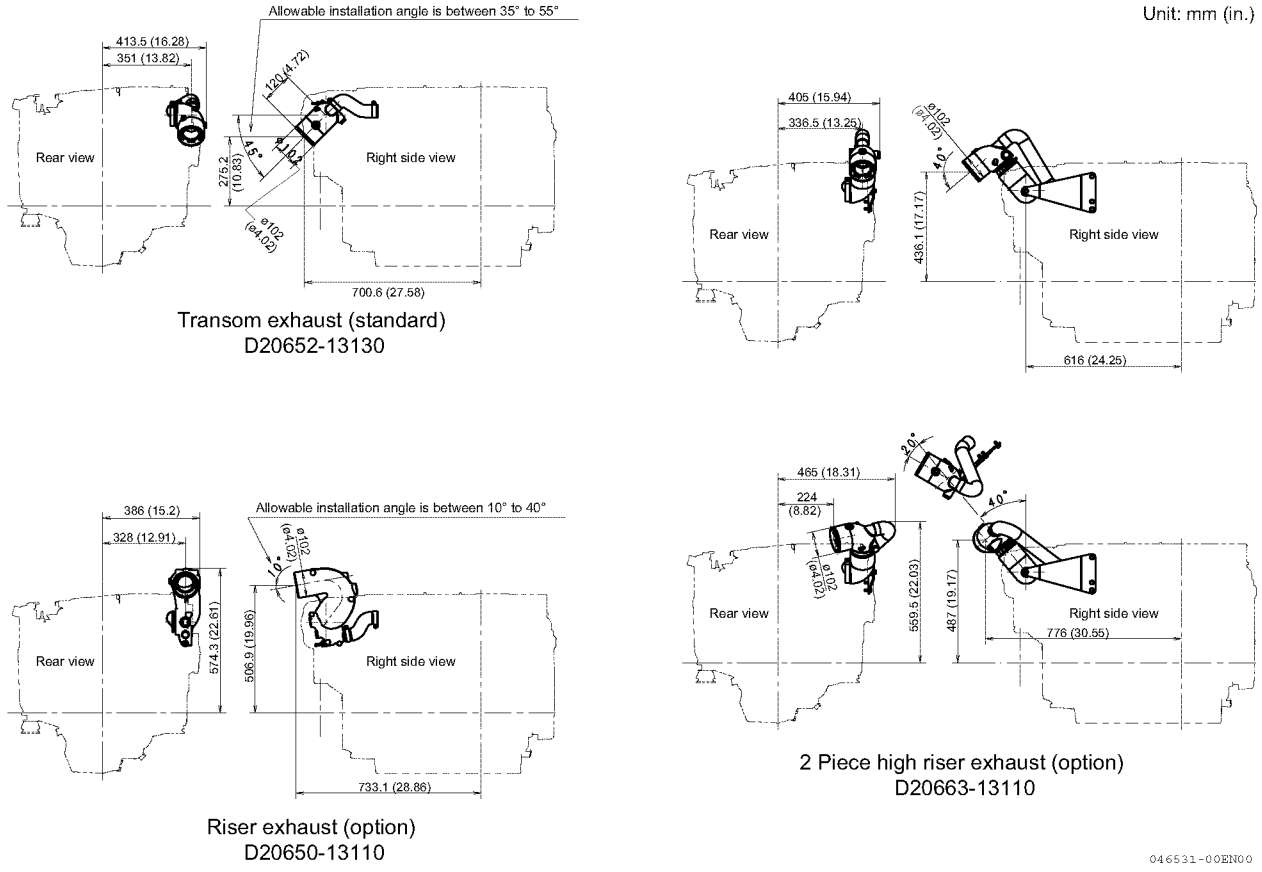


***Figure 8***

To install mixing elbow:

1. Torque V-clamp to 4.0 N·m (35.4 lb-in.).
2. Lightly tap on mixing elbow with plastic hammer to center elbow.
3. Tighten V-clamp to final torque of 5.5 ± 0.5 N·m (48.6 ± 4.4 lb-in.).

## Alarm System Specifications

| Parameter | Data | |
|---|---|---|
| | 6BY3-220 | 6BY3-260 |
| Coolant overheat alarm operating temperature | 108 °C (226 °F) | |
| Lube oil low pressure alarm (alarm not available on classic controls) | Below 1500 $min^{-1}$ (rpm): < 0.5 bar (7.25 psi) for more than one second | |
| | Above 1500 $min^{-1}$ (rpm): < 2.0 bar (29 psi) for more than one second | |
| Overspeed protection (fuel cutoff) | 4600 $min^{-1}$ (rpm) | |

## Remote Control System

### ■ Panel

The 6BY3 series utilizes YANMAR marine electronic control technology, incorporating an LCD multi-function display panel. Refer to the appropriate YANMAR electronic control system installation manual for detailed component specifications and options.

***YANMAR digital display***

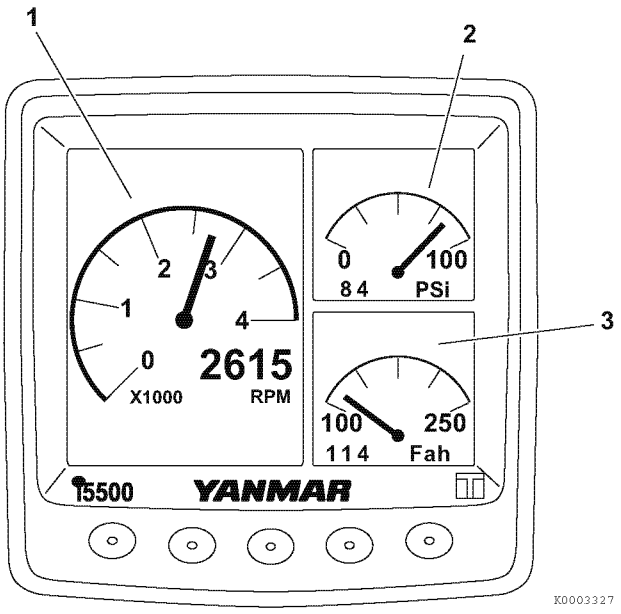


1 – Tachometer
2 – Engine oil pressure meter
3 – Multi-function meter (coolant temperature, lube oil temperature, fuel temperature, boost pressure, voltage, load factor, throttle valve, fuel consumption rate and gear shift position)

***Figure 9***

## Electrical System

Check all electrical connections per the wiring diagrams and ensure the bolts are tightened to the correct torque specifications.

### ■ Battery specifications

| Parameter | Data | |
|---|---|---|
| | 6BY3-220 | 6BY3-260 |
| Battery size (minimum)*1 | 12 V, 85 Ah, 680 CCA (cold cranking amps) | |
| Nominal output | 12 V/150 A | |
| Earth polarity | Negative ground | |

**1: No other device can be connected to the starting battery.*

### ■ Battery cable requirements

| Battery cable length | Battery cable area | AWG |
|---|---|---|
| 1.0 - 2.5 m (3.3 - 8.2 ft) | 50 $mm^2$ (0.08 $in.^2$) | 1 |
| 2.0 - 4.0 m (6.6 - 13.1 ft) | 70 $mm^2$ (0.11 $in.^2$) | 2/0 |
| 2.5 - 5.0 m (8.2 - 16.4 ft) | 95 $mm^2$ (0.15 $in.^2$) | 3/0 |
| 3.25 - 6.5 m (10.7 - 21.3 ft) | 120 $mm^2$ (0.19 $in.^2$)[2] | 4/0 |

**⚠ WARNING**

**Fire Hazard**

**Always route battery cables away from hot engine components, such as the exhaust manifold, turbocharger and exhaust hoses. Install rubber protective caps on each battery terminal.**

### ■ Starter specifications

| Parameter | Data | |
|---|---|---|
| | 6BY3-220 | 6BY3-260 |
| YANMAR code | 165001-35760 | |
| Starter model | BOSCH | |
| Voltage | 12 V | |
| Output | 2.0 kW (2.7 hp) | |
| Direction of rotation (viewed from pinion side) | Clockwise | |
| Weight | 3.5 kg (7.7 lb) | |
| Number of pinion teeth | 9 | |
| No-load terminal voltage | 12 V | |
| Loaded terminal voltage | 5.3 V | |
| Loaded maximum current | 1282 A | |
| Loaded torque | 32.3 N·m (23.8 lbf-ft) | |

### *Starter performance curve*

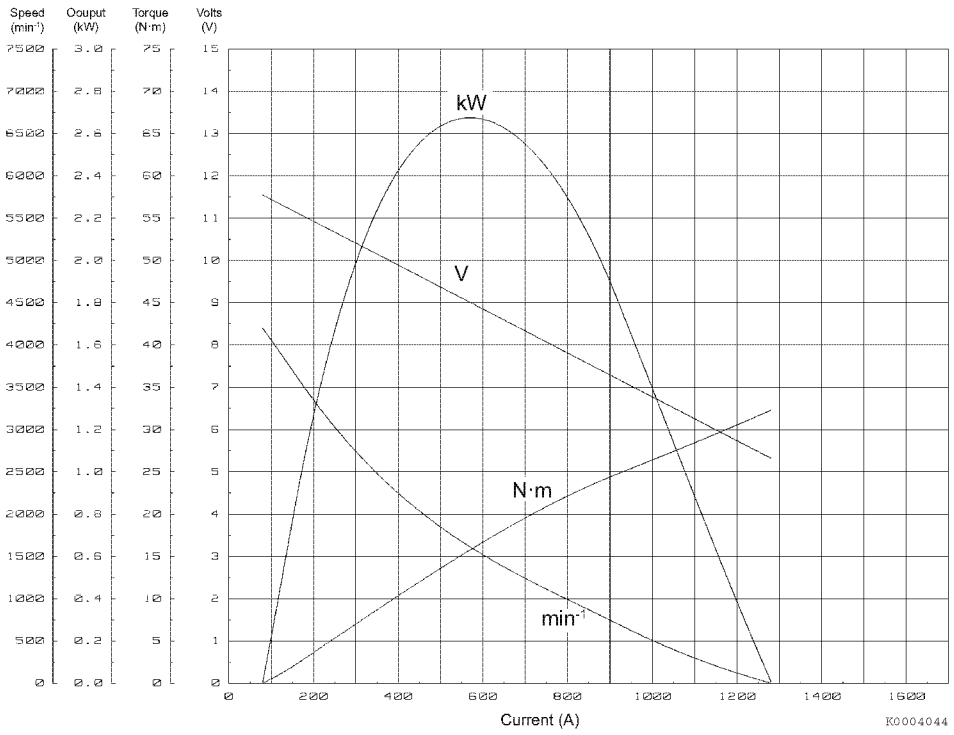


*Figure 10*

## ■ Standard alternator data

| Parameter | Data | |
|---|---|---|
| | 6BY3-220 | 6BY3-260 |
| YANMAR code | 165001-60020 | |
| Alternator model | Valeo | |
| Alternator | 12 V, 150 A | |
| IC regulator model | 7 788 823.1 | |
| Rotation (viewed from pulley end) | Clockwise | |
| Weight | 6.9 kg (15.2 lb) | |

## ■ Wiring diagram

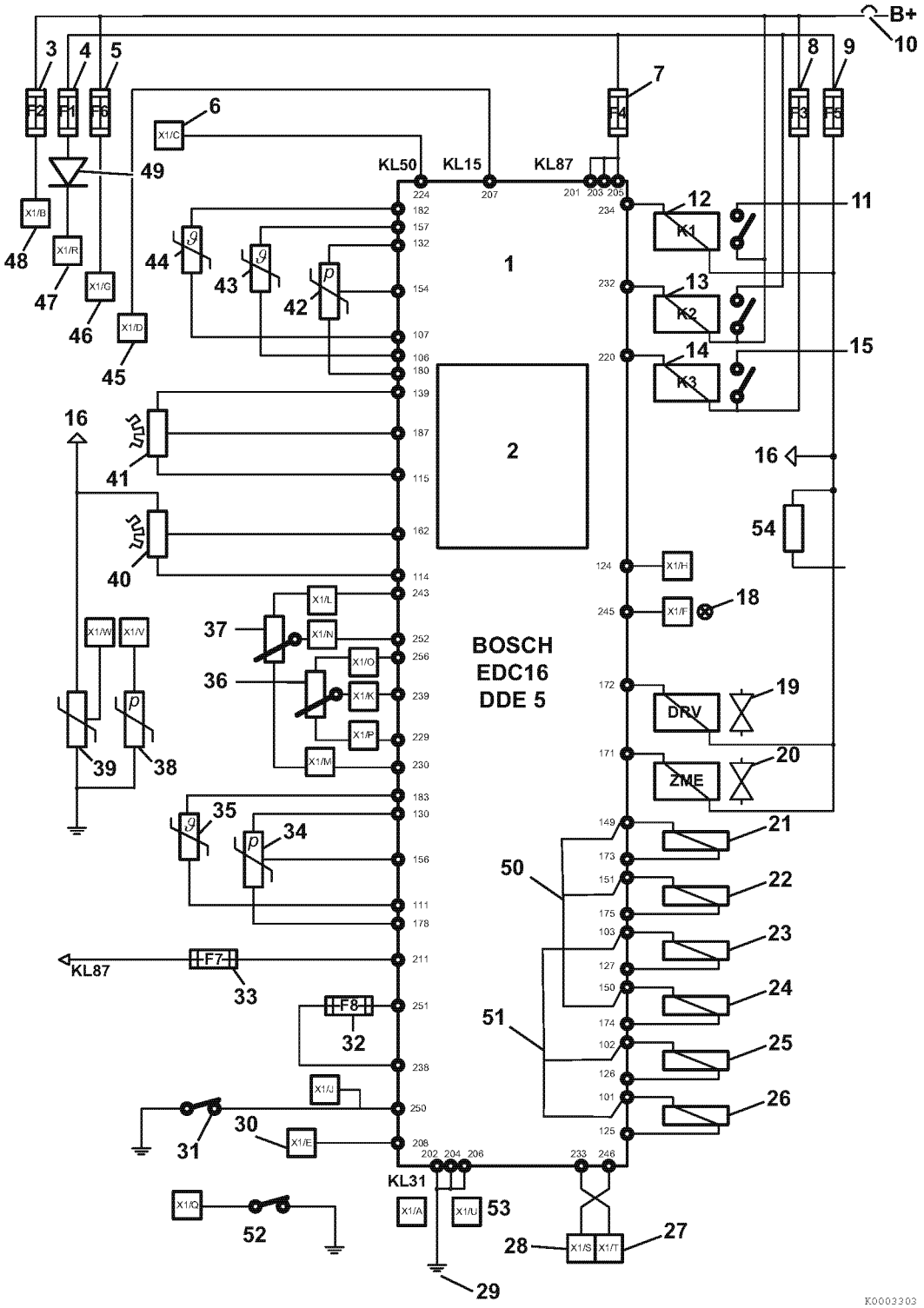


*Figure 11*

1 – Engine Control Unit (ECU)
2 – Internal ECU sensors (operating voltage and ambient air pressure)
3 – Fuse (F2) 10 A*1 - ignition
4 – Fuse (F1) 3 A - CAN switched power
5 – Fuse (F6) 10 A - auxiliary power
6 – Start signal from key switch
7 – Fuse (F4) 30 A - ECU switched power
8 – Fuse (F3) 15 A - fuel supply pump
9 – Fuse (F5) 20 A - fuel pressure regulator, water-in-fuel, camshaft sensor, and fuel volume regulator
10 – Circuit breaker (boatbuilder installed)
11 – Power to starter solenoid primary terminal
12 – Starter relay K1
13 – Main power relay K2
14 – Fuel supply pump relay K3
15 – Power to fuel supply pump
16 – B+ to water-in-fuel sensor
17 – Not used
18 – Check engine indicator output
19 – Fuel rail pressure control valve
20 – Fuel volume control (high-pressure pump)
21 – Fuel injector No. 4 (4BY3) or No. 6 (6BY3)
22 – Fuel injector No. 2 (4BY3) or No. 2 (6BY3)
23 – Fuel injector No. 3 (4BY3) or No. 5 (6BY3)
24 – Fuel injector No. 1 (4BY3) or No. 3 (6BY3)
25 – Fuel injector No. 1 (6BY3)
26 – Fuel injector No. 4 (6BY3)
27 – CAN signal - low
28 – CAN signal - high
29 – Panel, ECU, and CAN ground
30 – K-line
31 – Neutral start switch (NC in neutral)
32 – Jumper fuse (F8) 3 A - CAN/analog throttle selection, default is analog (fuse out). Insert 3 A fuse to configure for CAN.
33 – Jumper fuse (F7) 3 A - Single/port selection, default is single/port (fuse in). Remove fuse for starboard configuration.
34 – Fuel rail pressure sensor
35 – Fuel temperature sensor
36 – Subthrottle sensor 2
37 – Subthrottle sensor 1
38 – Oil pressure sensor
39 – Water-in-fuel sensor
40 – Camshaft speed sensor
41 – Crankshaft speed sensor
42 – Charge air pressure sensor
43 – Charge air temperature sensor
44 – Engine coolant temperature sensor
45 – Ignition power input from key switch (terminal X1-D)
46 – Auxiliary power output (terminal X1-G)
47 – NMEA + power supply (X7-R)
48 – Battery power to key switch (terminal X1-B)
49 – CAN signal blocking diode
50 – High bench 1
51 – High bench 2
52 – Oil pressure switch (X1-Q)
53 – NMEA ground supply
54 – Power resistor for the generator

**1: Never connect any additional devices to F2. F6 may be used however, it is not switched.*

# Performance Curves

### *6BY3-220*

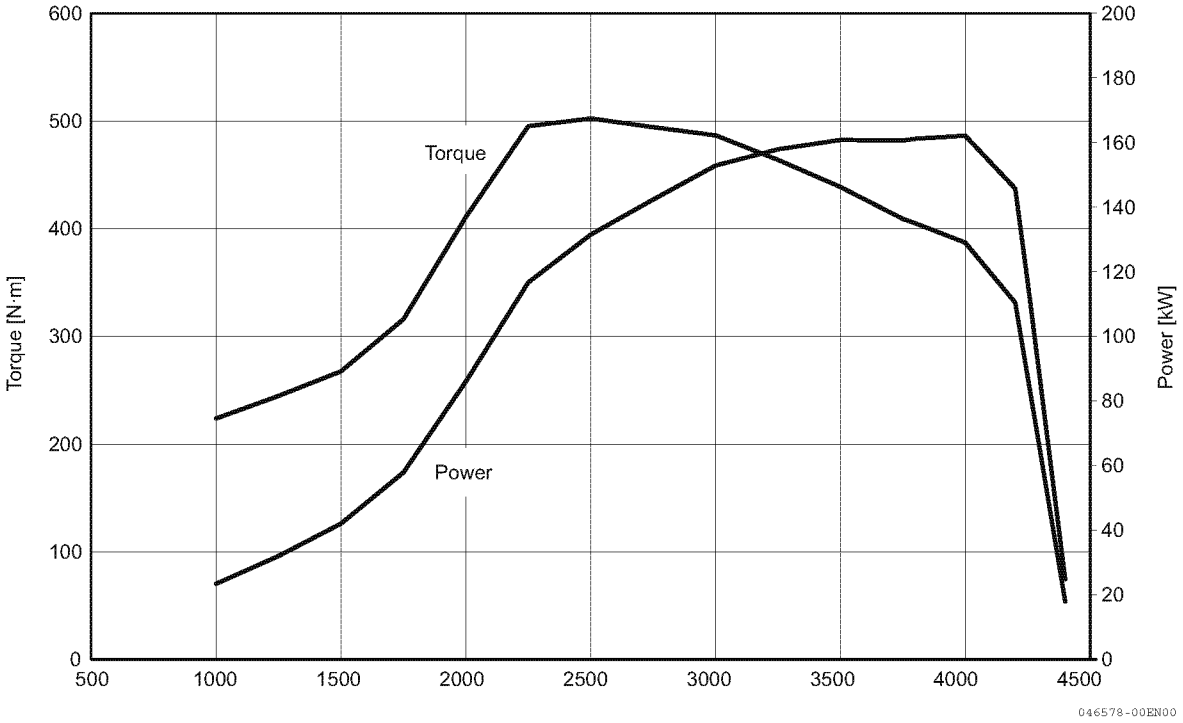


*Figure 12*

### *6BY3-260*

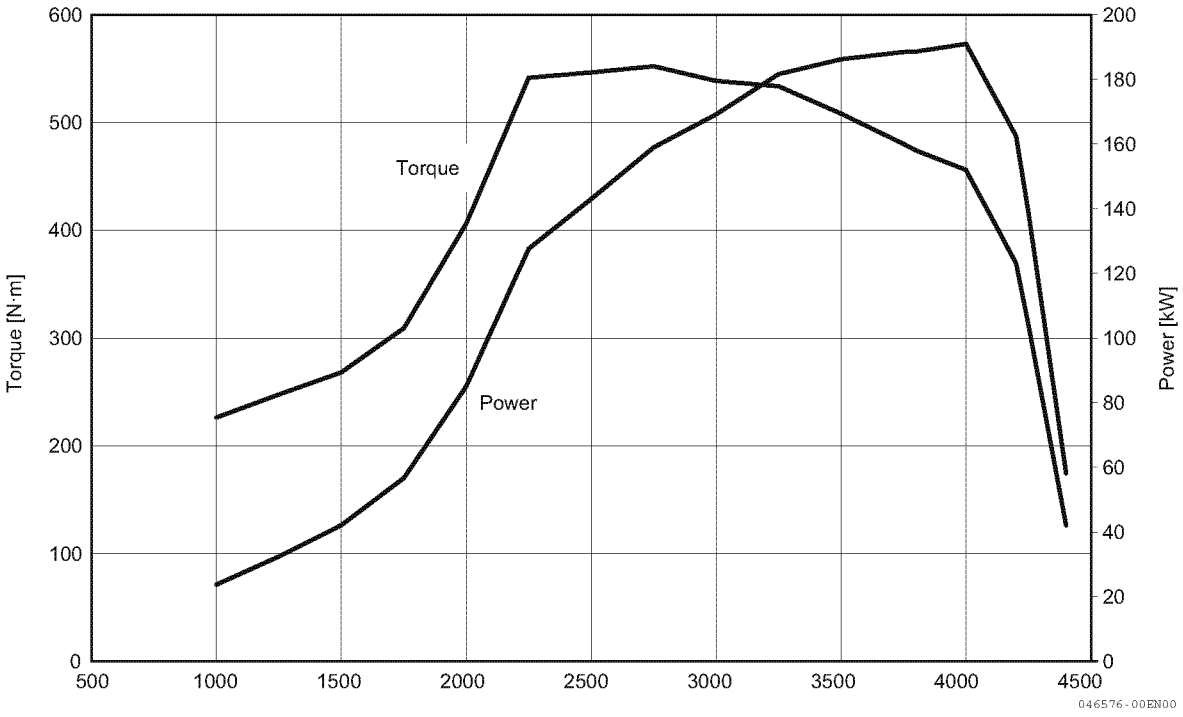


*Figure 13*

## ■ Fuel Consumption

### *6BY3-220*

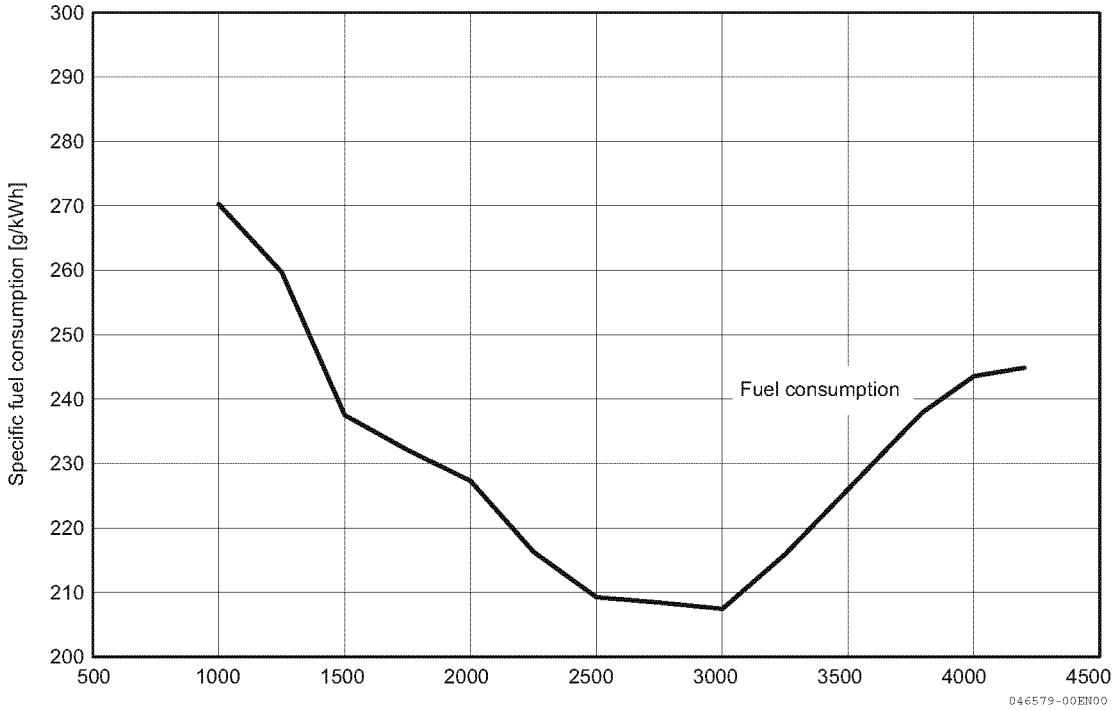


*Figure 14*

### *6BY3-260*

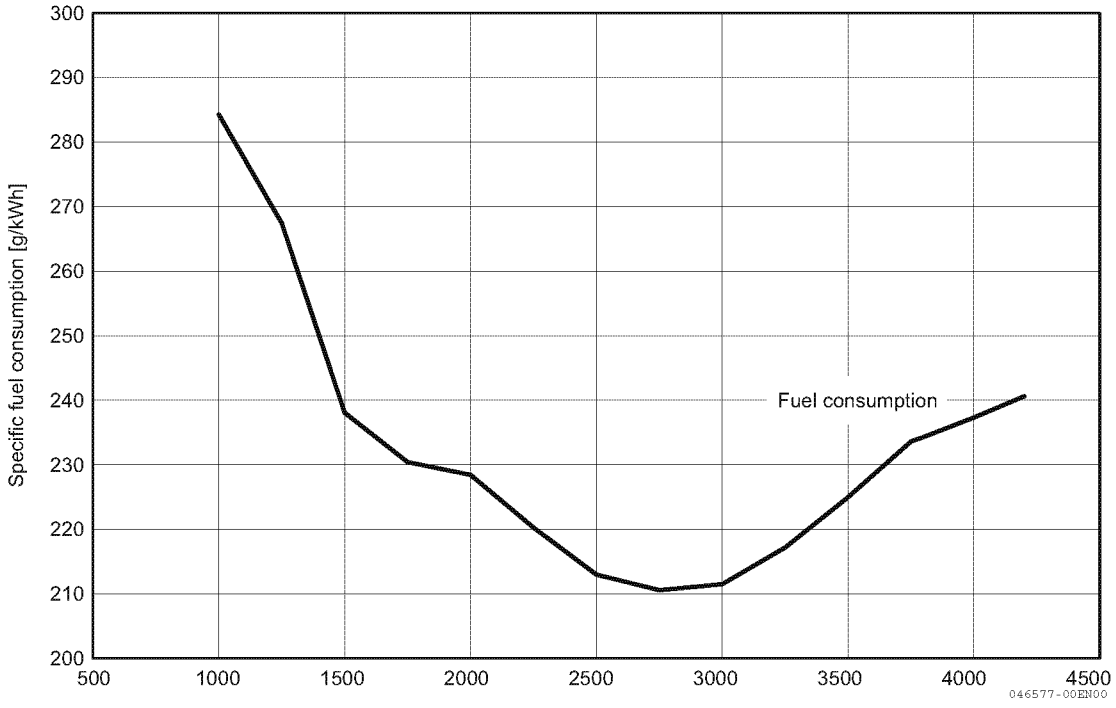


*Figure 15*

# Engine Mount

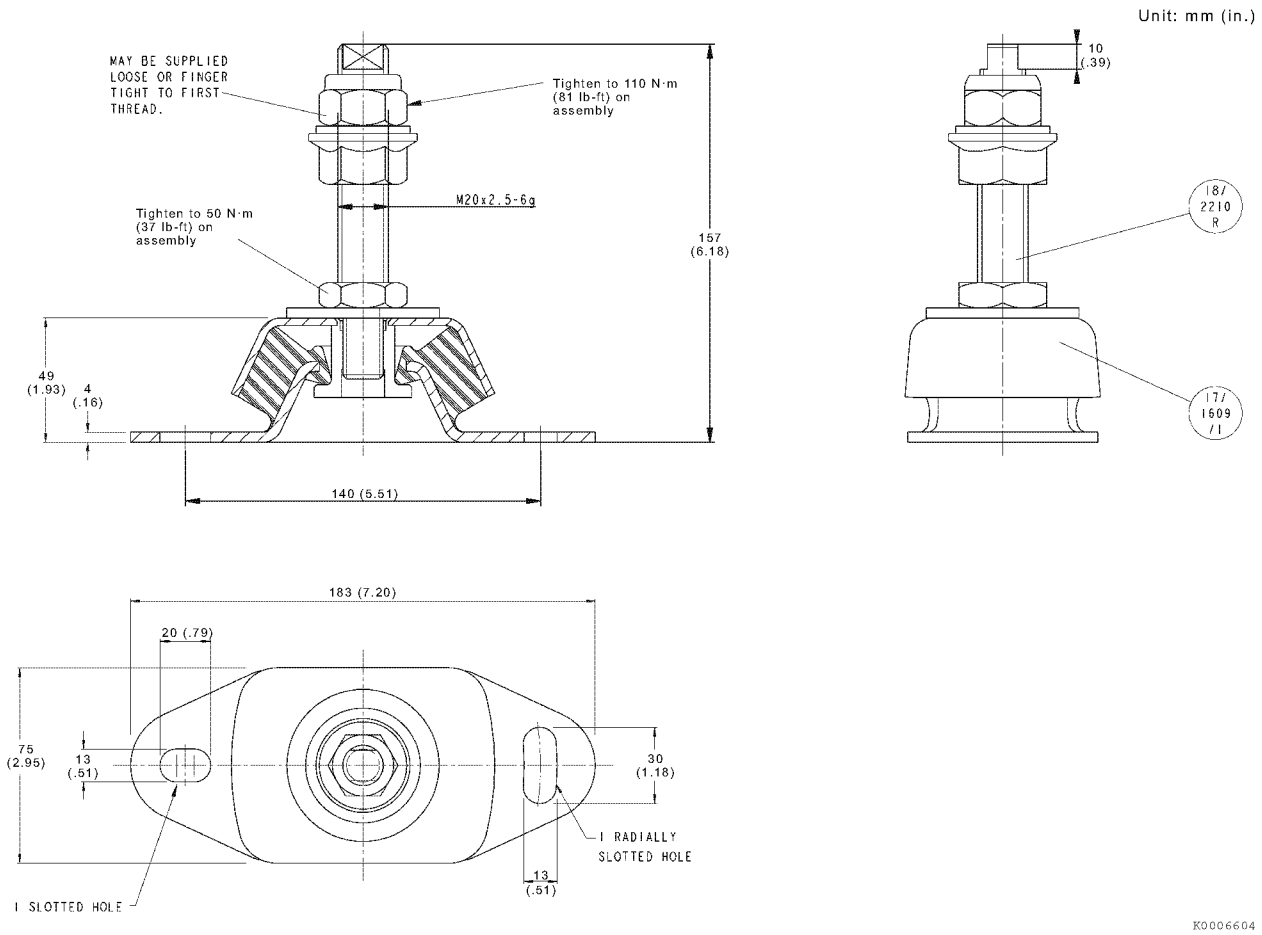


*Figure 16*

## ■ Marine gear side mounts for KMH41A/51A

| | |
|---|---|
| Type of mount | Flexible |
| Part number | 120650-08410 |
| Mount ID | Trelleborg<br>Movex number 10-03964-01<br>Compound 16 x 45 |
| Quantity | 2 |

## ■ Standard front engine mounts

| | |
|---|---|
| Type of mount | Flexible |
| Part number | 120650-08401 |
| Mount ID | Trelleborg<br>Movex number 10-04418-01<br>Compound 16 x 55 |
| Quantity | 2 |

# Installation Specifications

## ■ Inclination angle specifications

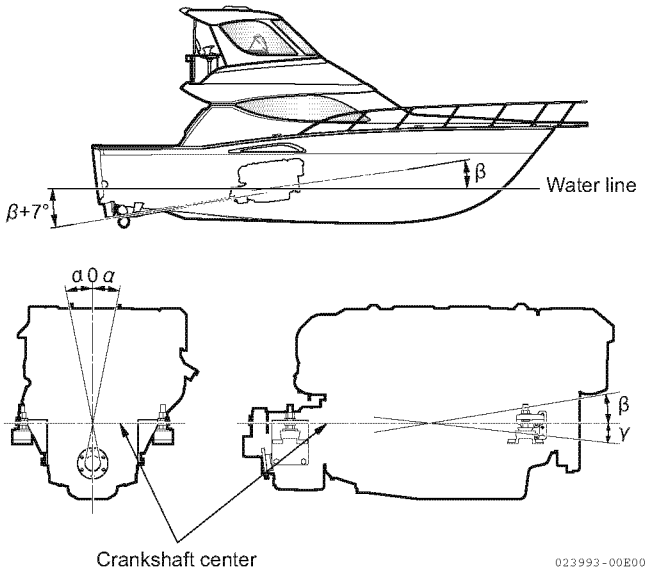


*Figure 17*

Unit: degree

| Inclination angle | | | |
|---|---|---|---|
| | **Static** | **Running** | **Peak** |
| β | 0-8 max | 20 | 25 |
| λ | 0 | -5 | -10 |
| α | 0 | 20 | 25 |

## Cold Starting Aids

The 6BY3 series engine is equipped with a glow plug cold starting aid.

## Water Heater Tank Connection

The 6BY3 series engine supports water heating tank connections for onboard head and galley operation.

**NOTICE**

Always route coolant hoses away from hot engine components. Never route coolant hoses over the flywheel side of the engine. To prevent damage from excess vibration, secure coolant hoses with approved clamps.

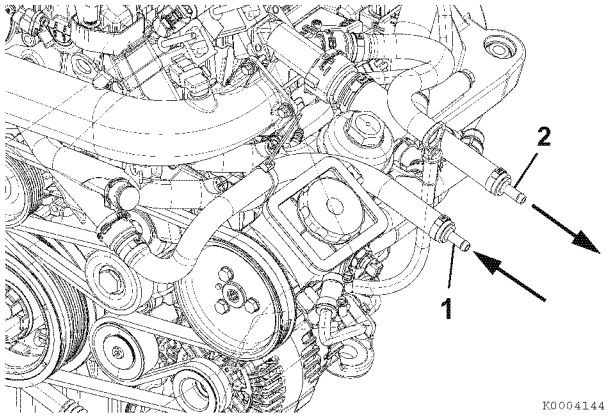


1 – Water from tank
2 – Water to tank

***Figure 18***

## Heat Insulation Requirements

Temperature proof from -30 to +150 °C.

Must fulfill the requirements of ISO 4589 for noise and temperature.

**⚠ WARNING**

**Fire Hazard**

**The insulation material used over the turbocharger must be made of fire resistanant material.**

## Optional Accessories

The following is a list of the 6BY3 series optional accessories.

- YANMAR digital display
- YANMAR rocker switch panel (1st station)
- YANMAR interface module, harness
- YANMAR control head
- YANMAR NMEA, terminal and T-connector, cable

**⚠ WARNING**

**Fire Hazard**

**Always route electrical connectors and harnesses away from hot engine components. To prevent damage from excess vibration, secure electrical connectors and harnesses with approved clamps.**